Breaking virtualization by any means

Jonathan Brossard
CEO – Toucan System

jonathan@
toucan-system.com

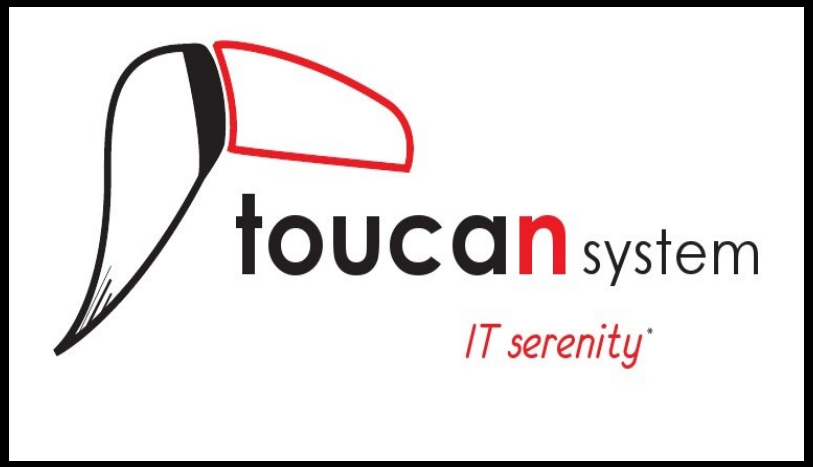

Who am I ?

Security Research Engineer. Focus on low level bugs, RCE, code/binary auditing.

CEO of Toucan System (French Startup).

Previous research : http://www.slideshare.net/endrazine

Getting in touch : http://twitter.com/endrazine

Agenda

- Virtualization : big picture
- Attack surface analysis
- Shared Guest OS Isolation
- Attacking the host
- Privileges escalation

Virtualization : big picture

Market shares
Definitions
Usage

Virtualization : market shares

Source : Forrester Research 2009

78% of companies have production servers virtualized.

20% only have virtualized servers.

Virtualization : market shares

Source : Forrester Research 2009

VMWare is present in 98% of the companies.
Microsoft virtualization products are used by 17%.
Citrix/Xen is used by 10%.

In a nutshell...

- As widespread as Apache or Bind
- Proprierary software, very few builds (= reliable exploitation)
- You don't need a « remote » exploit : you buy a shell at the same hosting provider.

Definitions

Virtualization : Definitions

Virtualization

Virtualization is the name given to the simulation with higher level components, of lower level components.

NOTE: Virtualization of applications (as opposed to full Oses) is out of topic.

Virtualization : Definitions

Virtual Machine

A virtual machine (VM) is : "an efficient, isolated duplicate of a real machine".
-- Gerald J. Popek and Robert P. Goldberg (1974). "Formal Requirements for Virtualizable Third Generation Architectures", Communications of the ACM.

Usage

- Cost reduction (shared hosting)
- Scalability (cloud computing)
- Run broken (old) applications

Attack surface analysis

Previous research

Privilege escalation on a guest

CVE-2009-2267 « Mishandled exception on page fault in VMware » Tavis Ormandy and Julien Tinnes

Privilege escalation on the host

VMware Tools HGFS Local Privilege Escalation Vulnerability

(http://labs.idefense.com/intelligence/vulnerabilities/display.php?id=712)

Attacking other guests

Vmare workstation guest isolation weaknesses (clipboard transfer)

http://www.securiteam.com/securitynews/5GP021FKKO.html

DoS (Host + Guests)

CVE-2007-4591 CVE-2007-4593 (bad ioctls crashing the Host+Guests)

Escape to host

Rafal Wojtczuk (Invisible things, BHUS 2008)

IDEFENSE VMware Workstation Shared Folders Directory Traversal Vulnerability (CVE-2007-1744)

Time for action

Shared Guest OS Isolation

Rebooting an alternate operating system

- Overwrite the MBR directly with autonomous offensive code
- Instrument the MBR

Optionally:
- Break boot passwords
- Attack disk encryption
- (Bootkiting, backdooring…)

Boot sequence overview

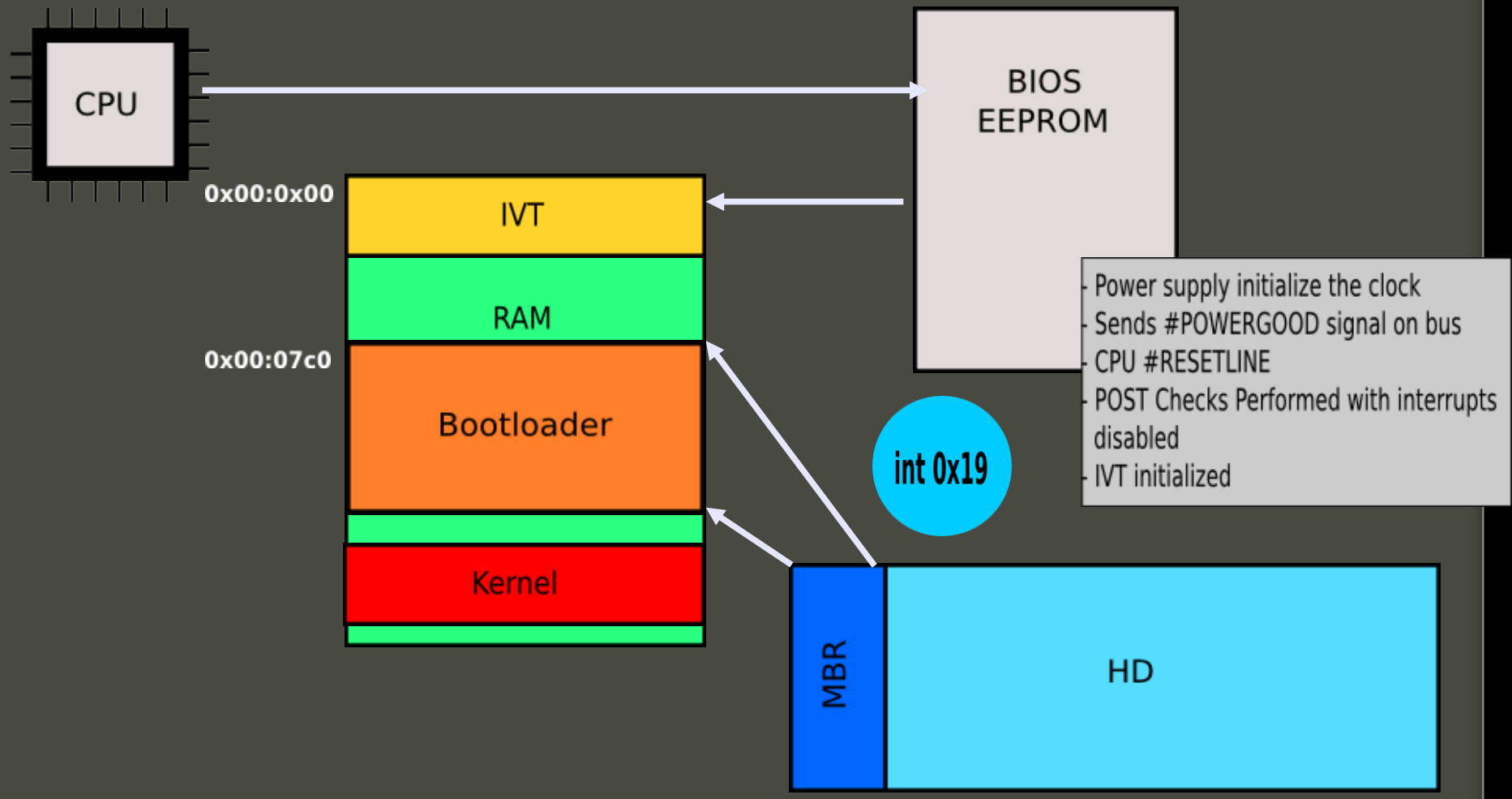

BIOS internals for keyboard management

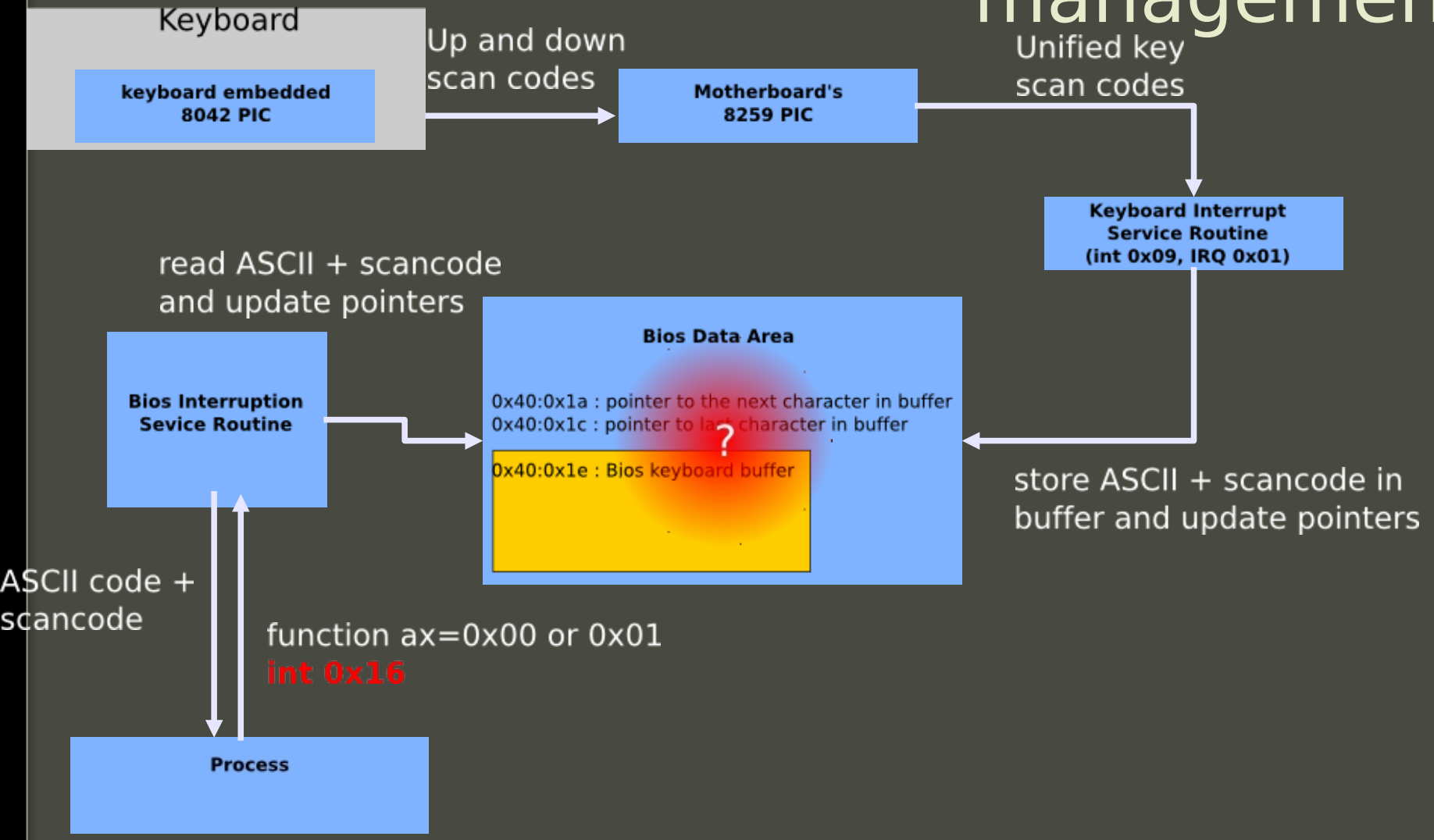

Bruteforcing Passwords

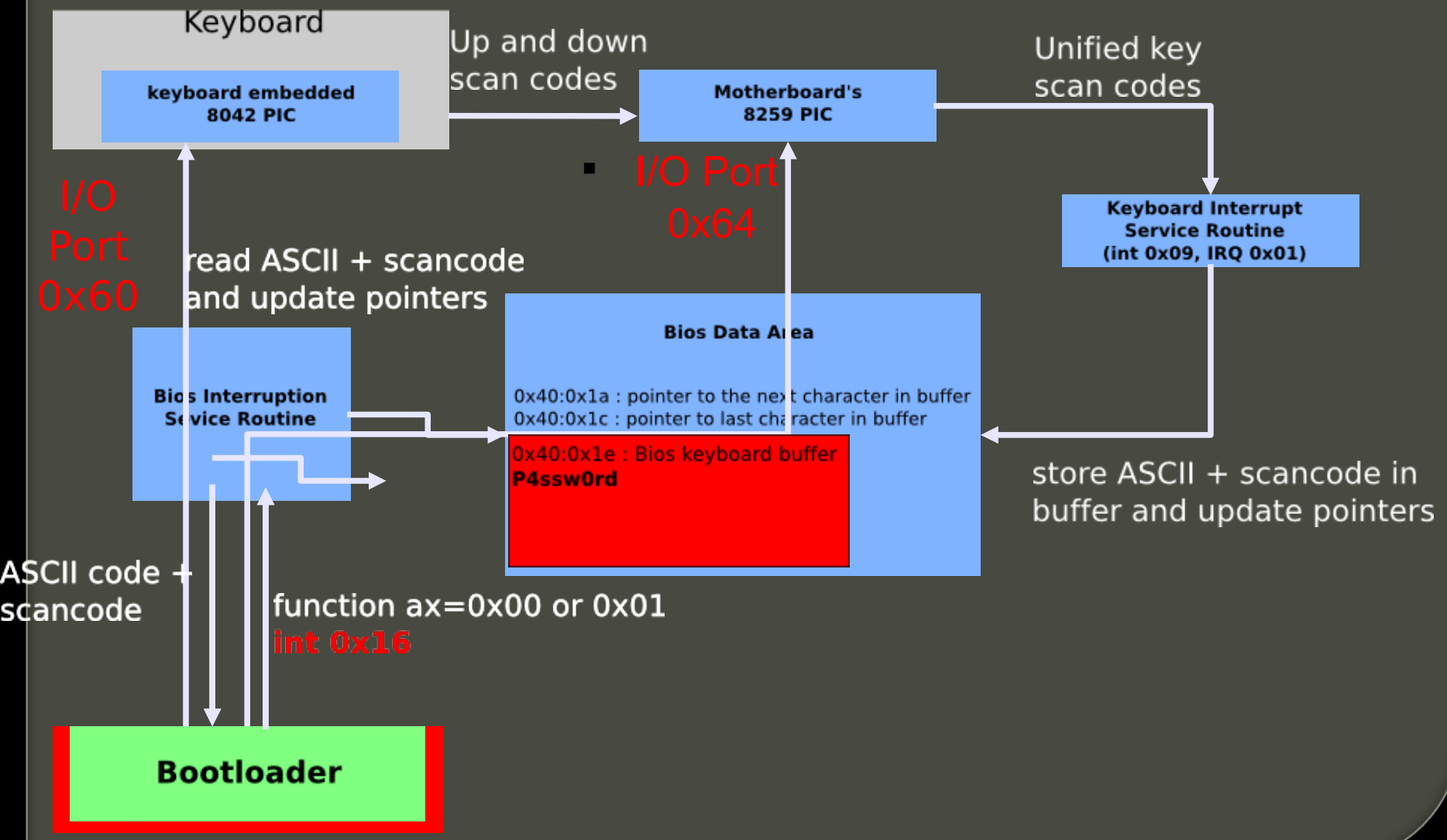

Attacking the hypervisor or host OS

Attacking the hypervisor or host OS

- **VM 86 fuzzing**
- **ioports fuzzing**
- **pci fuzzing**

Switching to virtual 8086 mode

- **Swith to VM 86 using :**

```
#define __NR_vm86old      113
#define __NR_vm86         166
```

- **Use old school 16b interrupts to fuzz the hardware**
- **Note : It's (kernel) emulated. Good news ! We can use it with x64 too :)**

example:

```
Mov ah, 0x42 ; read sector from drive
Mov ch, 0x01 ; Track
Mov cl, 0x02  ; Sector
Mov dh, 0x03 ; Head
Mov dl, 0x80  ; Drive (here first HD)
Mov bx, offset buff ; es:bx is destination

Int 0x13        ; hard disk operation
```

Vm86 fuzzing under x64

Event Viewer

File Action View Help

Event Viewer (Local)
- Custom Views
  - Server Roles
  - Administrative Events
  - Summary page events
- Windows Logs
- Applications and Services Logs
- Subscriptions

Summary page events Number of events: 1

Number of events: 1

Level	Date and Time	Source	Event ID	Task Category
Error	26/06/2010 22:30:00	Hyper-V-VMMS	14070	None

Event 14070, Hyper-V-VMMS

General | Details

Virtual machine 'Ubuntu-fuzzing' (ID=C079C835-0249-49DE-8A5D-1FBFA50D7D57) has quit unexpectedly.

Log Name:	Microsoft-Windows-Hyper-V-VMMS/Admin		
Source:	Hyper-V-VMMS	Logged:	26/06/2010 22:30:00
Event ID:	14070	Task Category:	None
Level:	Error	Keywords:	
User:	SYSTEM	Computer:	WIN-M5M10P60MNO
OpCode:	Info		
More Information:	Event Log Online Help		

Actions

Summary pa...
- Open Sa...
- Create C...
- Import C...
- Filter Cur...
- Properties
- Find...
- Save All ...
- Export C...
- Copy Cus...
- Attach T...
- View
- Delete
- Refresh
- Help

Event 14070,...
- Event Pr...
- Attach T...

Switching to virtual 8086 mode

Limitation : Hardware unknown at BIOS Post time can't be fuzzed this way.

=> We need complementary techniques to be exhaustive.

Other techniques

- PCI fuzzing (fuzzing hot plug devices)
- Ioports fuzzing : interract with any hardware.

Ioports fuzzing:

Ioports:

outb, outw, outl, outsb, outsw, outsl, inb, inw, inl, insb, insw, insl, outb_p, outw_p, outl_p, inb_p, inw_p, inl_p

Problems: sequence, multiple ports ...

PCI Fuzzing

- In 16b mode : use int 0x1a
- In 32 or 64b mode : fork from pciutils :)

Escalating privileges on the host

Privilege escalation

- attacking (suid) hypervisors
- attacking kernel modules with ioctls

Thank you for coming

Questions ?